Aquiline® Momentary - Polymeric PATENTED

LD LIGHT DUTY

EN 60529 Degree of Protection IP20 ***(IP68 Upon Request)***
971-SWNO210 & 971-SWNO210A are NEMA Type 1, 4X, 6 & 6P – UL Enclosure 1, 4X, 6 & 6P, and IP68

Watertight • Corrosion Resistant (Available)
VERSATILE COMPACT DESIGN

Materials of Construction:

- SPDT, DPDT, Two-Stage, Momentary Operation
- Rustproof and corrosion proof polymeric material
- Raised ribs on treadle for positive traction during operation
- Integrated adjustable strain relief clamp accommodates cord sizes from .250 Dia. to .400 Dia.

Features & Benefits:

- Flame retardant to 94-VI
- Maximum versatility, total performance
- Non-skid base pad
- 2 holes provided for rigid mounting to Floor or equipment

Options:

- Custom colors, and color matching available with quantity orders
- Private Labeling
- Accessory base units available for configurations using multiple switches
- Stainless steel full guard (single) 522-K26 available (See "Accessories - Guards" on page 75 for details)
- Supplied With Series Plug (See "Stock Cordsets with Molded Plug" on page 77 for details) unless otherwise noted
- Special variations built to functional customers' specifications are available on special order. Custom paint finishes, cordsets, nameplates and multi-pedal versions are available. Please contact LINEMASTER® for additional information
- Heavy gauge steel guard available (See "Accessories - Guards" on page 74 & 75 for details)

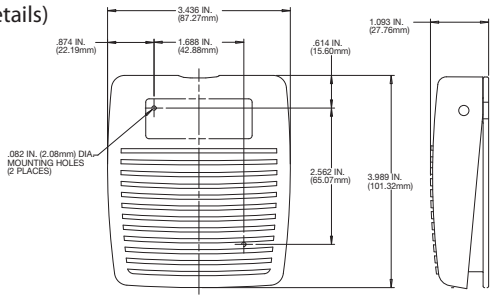

Polymeric - Single	
Size (HxWxD):	1.16 x 3.44 x 4.00 In.
Weight:	3.60 oz.

⚠WARNING SEE PRODUCT WARNING ON PAGE 8

SPECIFICATIONS (Special variations are available to the O.E.M. on special order on the models listed below)

AGENCY APPROVALS	EN 60529 Degree of Protection	CATALOG NUMBER	DESCRIPTION	COLOR	CIRCUIT	FORM	ELECTRICAL RATINGS
c UL us CE	IP20	971-S	Polymeric / Momentary	Dark Gray	SPDT	C	15 A 125-250 VAC 1/2 H.P. 125-250 VAC
c UL us CE	IP20	971-SA	Polymeric / Momentary	Light Gray	SPDT	C	
c UL us CE	IP20	971-SB	Polymeric / Momentary	Blue	SPDT	C	
c UL us CE	IP20	971-SO	Polymeric / Momentary	Orange	SPDT	C	
c UL us CE	IP20	971-SY	Polymeric / Momentary	Yellow	SPDT	C	
c UL us CE	IP20	974-S	Polymeric / Momentary	Dark Gray	DPDT	C	15 A 125-250 VAC 1/2 H.P. 125-250 VAC
c UL us CE	IP20	974-SA	Polymeric / Momentary	Light Gray	DPDT	C	
c UL us CE	IP68	971-SWNO210[1]	Polymeric / Momentary	Dark Gray	SPST Wired N.O.	A	3 A 25 VAC
c UL us CE	IP68	971-SWNO210A[1]	Polymeric / Momentary	Light Gray	SPST Wired N.O.	A	
c UL us CE	IP20	971-SC26[2]	Polymeric / Momentary	Dark Gray	SPDT Wired N.O.	A	10 A 125-250 VAC 1/2 H.P. 125-250 VAC
c UL us CE	IP20	971-SC26A[2]	Polymeric / Momentary	Light Gray	SPDT Wired N.O.	A	

[1]Meets IP68 & is supplied with 10 ft. 18/2 cord without plug.
[2]Supplied with 6ft. 18/2 cord without plug.

LINEMASTER® AMERICA'S FOOT SWITCH LEADER
www.linemaster.com
29 Plaine Hill Road
POB 238
Woodstock, CT 06281-0238 USA
Call: (860) 974-1000
Fax: (860) 974-0691
Fax Toll Free (US Only): (800) 974-3668

Courtesy of Steven Engineering, Inc.-230 Ryan Way, South San Francisco, CA 94080-6370-Main Office: (650) 588-9200-Outside Local Area: (800) 258-9200-www.stevenengineering.com

PATENTED Aquiline® Maintained - Polymeric

EN 60529 Degree of Protection IP20 ***(IP68 Upon Request)***

Corrosion Resistant
VERSATILE COMPACT DESIGN

Materials of Construction:

- SPST, Maintained Operation
- Rustproof and corrosion proof reinforced polymeric material
- Raised ribs on treadle for positive traction during operation
- Integrated adjustable strain relief clamp accommodates cord sizes from .250 Dia. to .400 Dia.

Features & Benefits:

- Flame retardant to 94-VI
- Maximum versatility, total performance
- Non-skid base pad
- 2 holes provided for rigid mounting to Floor or equipment

Options:

- Custom colors, and color matching available with quantity orders
- Private Labeling
- Accessory base units available for configurations using multiple switches
- Stainless steel full guard (single) 522-K26 available (See "Accessories - Guards" on page 75 for details)
- Supplied With Series Plug (See "Stock Cordsets with Molded Plug" on page 77 for details) unless otherwise noted
- Special variations built to functional customers' specifications are available on special order. Custom paint finishes, cordsets, nameplates and multi-pedal versions are available. Please contact LINEMASTER® for additional information
- Heavy gauge steel guard available (See "Accessories - Guards" on page 74 & 75 for details)

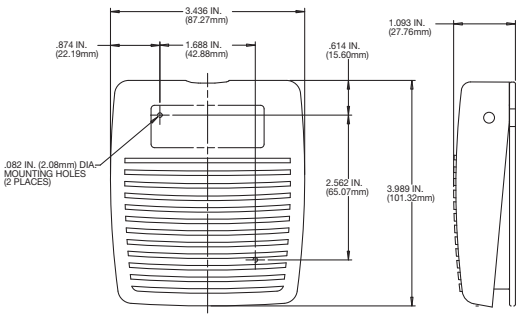

Polymeric - Single	
Size (HxWxD):	1.16 x 3.44 x 4.00 In.
Weight:	3.60 oz.

⚠WARNING SEE PRODUCT WARNING ON PAGE 8

SPECIFICATIONS (Special variations are available to the O.E.M. on special order on the models listed below)

AGENCY APPROVALS	EN 60529 Degree of Protection	CATALOG NUMBER	DESCRIPTION	COLOR	CIRCUIT	FORM	ELECTRICAL RATINGS
c UL us CE	IP20	971-DH	Polymeric / Maintained	Black	SPST-NO	A	16 A 125-250 VAC 3/4 H.P. 125-250 VAC
c UL us	IP20	971-DC3H[1]	Polymeric / Maintained	Black	SPST-NO	A	15 A 125 VAC 1/2 H.P. 125 VAC
c UL us CE	IP20	971-DC26H[2]	Polymeric / Maintained	Black	SPST-NO	A	16 A 125-250 VAC 3/4 H.P. 125-250 VAC
c UL us CE	IP20	971-DC28H[3]	Polymeric / Maintained	Black	SPST-NO	A	

[1]Supplied with 8 ft. 14/3 cord with 3 prong series plug. Plastic model is not grounded.
[2]Supplied with 6 ft. 14/2 cord, no ground.
[3]Supplied with 8 ft. 14/2 cord, no ground.

Courtesy of Steven Engineering, Inc.-230 Ryan Way, South San Francisco, CA 94080-6370-Main Office: (650) 588-9200-Outside Local Area: (800) 258-9200-www.stevenengineering.com

Aquiline® - Metal PATENTED

LD LIGHT DUTY

EN 60529 Degree of Protection IP20

VERSATILE COMPACT DESIGN

Materials of Construction:

- SPDT, DPDT, Two-Stage, Momentary or Maintained Operation
- Rustproof and corrosion proof cast zinc cover and formed steel base
- Raised ribs on treadle for positive traction during operation
- Integrated adjustable strain relief clamp accommodates cord sizes from .250 Dia. to .400 Dia.

Features & Benefits:

- Maximum versatility, total performance
- Non-skid base pad
- 2 holes provided for rigid mounting to Floor or equipment
- Twin model has Electrical Interlock feature

Options:

- Custom colors, and color matching available with quantity orders
- Private Labeling
- Accessory base units available for configurations using multiple switches
- Stainless steel full guard (single) 522-K26 available (See "Accessories - Guards" on page 75 for details)
- Supplied With Series Plug (See "Stock Cordsets with Molded Plug" on page 77 for details) unless otherwise noted
- Special variations built to functional customers' specifications are available on special order. Custom paint finishes, cordsets, nameplates and multi-pedal versions are available. Please contact us for additional information
- Heavy gauge steel guard available (See "Accessories - Guards" on page 74 & 75 for details)

Single	
Size (HxWxD):	1.09 x 3.44 x 3.99 In.
Weight:	13 oz.
Twin	
Size (HxWxD):	1.25 x 7.547 x 5.562
Weight:	2.5 lbs.

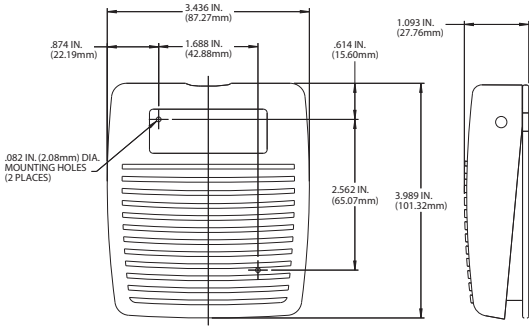

⚠WARNING SEE PRODUCT WARNING ON PAGE 8

SPECIFICATIONS (Special variations are available to the O.E.M. on special order on the models listed below)

AGENCY APPROVALS	EN 60529 Degree of Protection	CATALOG NUMBER	DESCRIPTION	COLOR	CIRCUIT	FORM	ELECTRICAL RATINGS
c UL us CE	IP20	971-DHM	Die Cast Zinc / Maintained	Black	SPST-NO	A	16 A 125-250 VAC 3/4 H.P. 125-250 VAC
c UL us	IP20	971-DC3HM[1]	Die Cast Zinc / Maintained	Black	SPST-NO	A	15 A 125 VAC 1/2 H.P. 125 VAC
c UL us CE	IP20	971-DC36HM[2]	Die Cast Zinc / Maintained	Black	SPST-NO	A	16 A 125-250 VAC 3/4 H.P. 125-250 VAC
c UL us CE	IP20	971-DC38HM[3]	Die Cast Zinc / Maintained	Black	SPST-NO	A	
c UL us CE	IP20	971-SM	Die Cast Zinc / Momentary	Black	SPDT	C	15 A 125-250 VAC 1/2 H.P. 125-250 VAC
c UL us CE	IP20	972-S	Die Cast Zinc / Momentary 2-Stage	Black	SPDT Each Stage	C	
c UL us CE	IP20	974-SM	Die Cast Zinc / Momentary 2-Stage	Black	DPDT Each Stage	C	
c UL us CE	IP20	TWIN 971-SMC48[4]	Die Cast Zinc / Momentary	Black	SPDT Wired N.O.	A	13 A 125-250 VAC 1/2 H.P. 125-250 VAC

[1]Supplied with 8 ft. 14/3 cord with 3 prong series plug. Plastic model is not grounded. [2]Supplied with 6 ft. 14/3 cord, grounded. [3]Supplied with 8 ft. 14/3 cord, grounded. [4]Supplied with 8' 16/4 cord without plug. Green lead grounded.

LINEMASTER® AMERICA'S FOOT SWITCH LEADER
www.linemaster.com
29 Plaine Hill Road
POB 238
Woodstock, CT 06281-0238 USA
Call: (860) 974-1000
Fax: (860) 974-0691
Fax Toll Free (US Only): (800) 974-3668

Courtesy of Steven Engineering, Inc.-230 Ryan Way, South San Francisco, CA 94080-6370-Main Office: (650) 588-9200-Outside Local Area: (800) 258-9200-www.stevenengineering.com