BI1-EG05-AN6X
Inductive Sensor

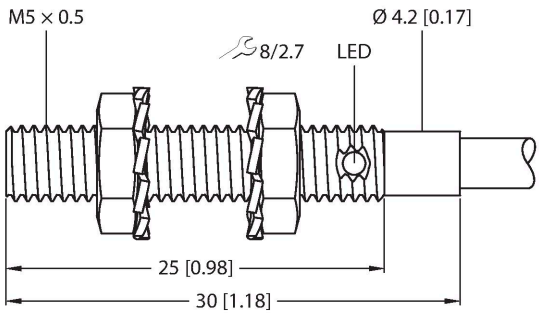

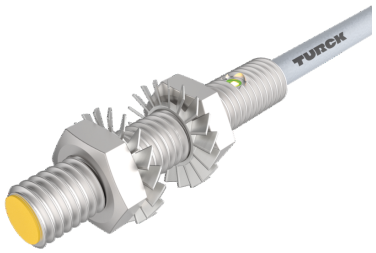

Technical data

Type	BI1-EG05-AN6X
ID	4609840
General data	
Rated switching distance	1 mm
Mounting conditions	Flush
Secured operating distance	≤ (0.81 × Sn) mm
Correction factors	St37 = 1; Al = 0.3; stainless steel = 0.7; Ms = 0.4
Repeat accuracy	≤ 2 % of full scale
Hysteresis	10 %
Electrical data	
Operating voltage	10…30 VDC
Residual ripple	≤ 10 % U_{ss}
DC rated operational current	≤ 100 mA
No-load current	15 mA
Residual current	≤ 0.1 mA
Isolation test voltage	≤ 0.5 kV
Short-circuit protection	yes / Cyclic
Voltage drop at I_e	≤ 1.8 V
Wire breakage/Reverse polarity protection	yes / Complete
Output function	3-wire, NO contact, NPN
Switching frequency	3 kHz
Mechanical data	
Design	Threaded barrel, M5 x 0.5

Features

- Threaded barrel, M5 × 0.5
- Stainless steel, 1.4305 (AIS303)
- DC 3-wire, 10…30 VDC
- NO contact, NPN output
- Cable connection

Wiring diagram

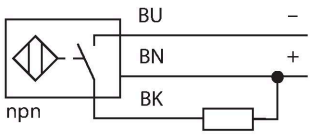

Functional principle

Inductive sensors detect metal objects contactless and wear-free. For this, they use a high-frequency electromagnetic AC field that interacts with the target. Inductive sensors generate this field via an RLC circuit with a ferrite coil.

Technical data

Dimensions	30 mm
Housing material	Stainless steel, 1.4305 (AISI 303)
Active area material	Plastic, PA6.6
Max. tightening torque of housing nut	2.5 Nm
Electrical connection	Cable
Cable quality	Ø 3.3 mm, Gray, LifY-11Y, PUR, 2 m
Core cross-section	3 x 0.14 mm^2
Environmental conditions	
Ambient temperature	-25…+70 °C
Vibration resistance	55 Hz (1 mm)
Shock resistance	30 g (11 ms)
Protection class	IP67
MTTF	2283 years acc. to SN 29500 (Ed. 99) 40 °C
Switching state	LED, Yellow

Mounting instructions

Mounting instructions/Description

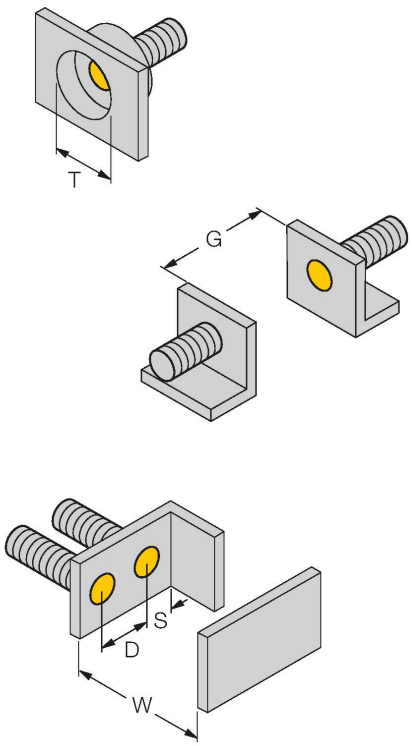

Distance D	3 × B
Distance W	3 x Sn
Distance T	3 x B
Distance S	1.5 x B
Distance G	6 x Sn
Diameter active area B	Ø 5 mm

BI1-EG05-AN6X| 11/07/2023 13-29 | technical changes reserved